Type-A/C Dual-port Fast Charging Protocol Controller CH237

Datasheet

Version: 1F

http://wch.cn

1. Overview

CH237 is a Type-A/C dual-port fast charging protocol controller, supports one Type-C interface and one Type-A interface to be used at the same time, supports fast charging protocols such as PD2.0/3.0, PPS, BC1.2, supports AC-DC and DC-DC power management, and supports constant voltage loop and constant current loop, with features of high integration and simplified peripherals. It supports VBUS detection and discharge functions, and provides over-voltage, over-temperature and over-current protection, etc. CH237 can be widely used in various occasions such as AC power adapter, car charger, UPS and power bank.

2. Functional features

- Supports 3.3V-24V wide voltage input. Output voltage adjustable in 20mV step
- Supports one Type-C interface and one Type-A interface to be used at the same time
- Supports multiple fast charging protocols such as PD2.0/3.0, PPS and BC1.2.
- Cable voltage drop compensation:100mV/A
- N-MOS or P-MOS is optional for the Type-C interface
- Supports AC-DC and DC-DC constant voltage loop and constant current loop
- High integration, simplified peripherals and low cost
- Built-in over-current protection (OCP), over-temperature protection(OTP), power supply over-voltage protection(OVP) and under-voltage protection (UVP)

3. Applications

- Dual-port AC power adapter
- Dual-port car charger
- UPS
- Power bank

4. Package

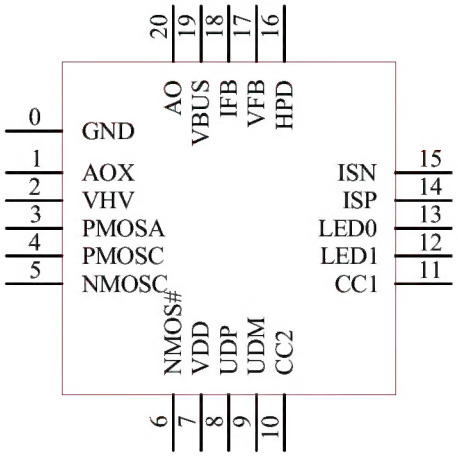

Figure 4.1 CH237D (QFN20_3*3 package) pinouts

5. Pin definitions

Pin No.	Pin Name	Pin Type	Description
2	VHV	HV power	High-voltage positive power input, connects to an external 1uF decoupling capacitor
0	GND	Power	Ground
7	VDD	Operating power	Internal LDO output, connects to an external 1uF decoupling capacitor
19	VBUS	HV input	VBUS discharge port
3	PMOSA	Unidirectional output	Type-A interface P-MOS gate driver
4	PMOSC		Type-C interface P-MOS gate driver
5	NMOSC		Type-C interface N-MOS gate driver
6	NMOS#	Configuration input	Type-C interface N-MOS enabling #
14	ISP	Differential amplifier Analog input	Positive input of low voltage current detection module
15	ISN		Negative input of low voltage current detection module
17	VFB	Analog input	Power management constant voltage loop feedback
18	IFB		Power management constant current loop feedback
20	AO	HV analog output	Power management feedback driver
1	AOX	HV analog output	Power management feedback driver
16	HPD	Analog input	Type-A interface connection detection
8,9, 10,11	UDP,UDM, CC1,CC2	Bi-directional Tri-state Analog bidirectional	USB D +/D- data line Type-C PD data line CC1/CC2
13,12	LED0,LED1	LV output	LED anode driver, customized

6. Functional description

6.1. Power supply pins: VHV and VDD

The VHV pin of CH237 is the high-voltage power input pin of the chip. It should be connected to the output of AC-DC or DC-DC converter. The VDD pin is the output terminal of the internal LDO of CH237, and a 1uF decoupling capacitor must be connected.

6.2. Pins related to power feedback: AO, IFB and VFB

The CH237 supports AC-DC power management. CH237 controls the optocoupler current through the AO pin to adjust the power output voltage. IFB and VFB pins need to be connected with a loop compensation capacitor to the AO pin (refer to Chapter 8 for capacitance value). By changing the capacitance value of capacitor on the VFB pin, the adjustment speed of CH237 to the output voltage can be changed to adapt to the AC-DC power supply of different frequencies.

The CH237 can be used to control DC-DC power, refer to Figure 8.2 for design.

6.3. PD and USB communication pins: CC1/CC2/UDP/UDM

The CC1/CC2 pins are used for Type-C interface device connection detection, and Type-C PD communication. It has a built-in configurable current source, and the default is 3A current. D+/D- at the Type-C interface shall be short-circuited.

The UDP/UDM pin is used for the fast charging protocol communication of the Type-A interface.

6.4. Discharge pin: VBUS

The VBUS pin is used to output power on. It should be connected to VHV. If CH237 detects that voltage on VBUS is too high, it will enable VBUS discharge function until the voltage on VBUS is within the safe voltage.

6.5. Type-A interface MOS control pin: PMOSA

CH237 controls the P-MOS of the Type-A interface through the PMOSA pin, to control the power switching-on and switching-off of the Type-A interface.

6.6. Type-C interface MOS control pins: PMOSC, NMOSC and NMOS#

When N-MOS is used in power channel, NMOS# pin should be connected to GND, and NMOSC pin should be connect to the gate of the external N-MOS to control the type-C interface power ON or OFF.

When P-MOS is used in power channel, NMOS# pin should be suspended, and NMOSC pin should be shorted to PMOSC pin, PMOSC pin connects to the gate of the external P-MOS to control the type-C interface power ON or OFF.

6.7. Type-A interface insertion detection pin: HPD

CH237 detects the insertion of a device with Type-A interface through the HPD pin, to realize dual-port simultaneous charging. The HPD pin and the VDD pin are respectively connected in series with resistors to the Type-A interface VBUS. When the voltage on the HPD pin is continuously lower than 2V, the Type-A interface insertion event will be triggered.

6.8. Differential current detection pin: ISP/ISN

The CH237 integrates a high-precision differential amplifier for current sampling. The corresponding input pins are ISP and ISN.

The ISP/ISN needs to be connected to the RC filter circuit and then connected to the two ends of the sense resistor. Please do not connect the ISN pin directly to the GND pin or the GND network on the PCB.

7. Description of protection functions

7.1. Over-voltage protection

CH237 implements the over-voltage protection function by detecting the voltage on the VHV pin. The typical value of the over-voltage protection threshold voltage is 25.6V. When the overvoltage protection occurs, CH237 will control the charging interface MOS to be switched off and enter the discharge mode until all fault signals disappear, and then the fast charging communication connection will be re-established.

7.2. Over-temperature protection

CH237 will trigger over-temperature protection when the temperature exceeds the over-temperature protection trigger temperature (typical value is 147°C). When the over-temperature protection is triggered, CH237 will control the charging interface MOS to be switched off, enter the discharge state until the temperature is below the over-temperature protection release temperature (typical value is 100°C) and all fault signals disappear, and then the fast charging communication connection will be re-established.

7.3. Over-current protection

When CH237 detects that the sensed current exceeds the threshold current, over-current protection will occur. The threshold current is adjusted real-timely according to the current voltage tap position and interface usage, usually 110% of the rated current at the current voltage (take PD 5V@3A as an example, the typical value of threshold current is 3.3A). When the overcurrent protection occurs, CH237 will control the charging interface MOS to be switched off and enter the discharge mode until all fault signals disappear, and then the fast charging communication connection will be re-established.

7.4. Under-voltage protection

When the voltage on the VHV pin is lower than the threshold voltage (typical value is 2.4V), CH237 will trigger the under-voltage protection. When the under-voltage protection occurs, CH237 will control the charging interface MOS to be switched off and enter the discharge mode until all fault signals disappear, and then the fast charging communication connection will be re-established.

8. Reference circuit of application

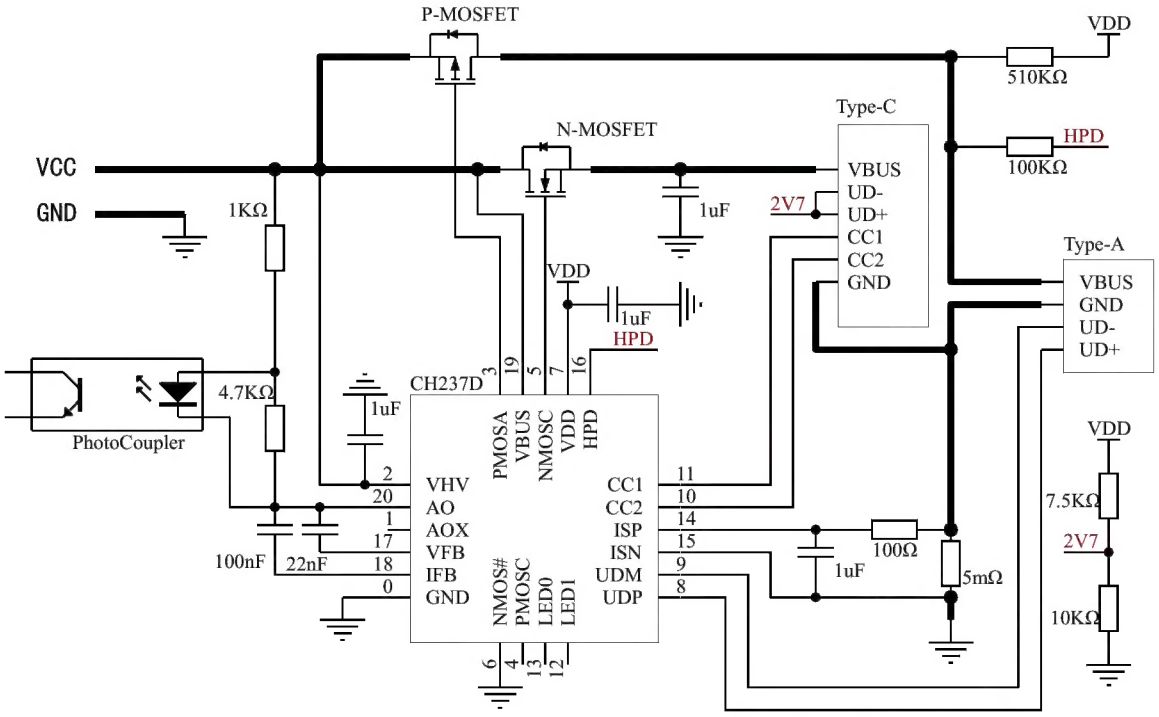

Figure 8.1 Type-A/C Dual-port fast charging reference circuit when CH237D works with AC-DC power

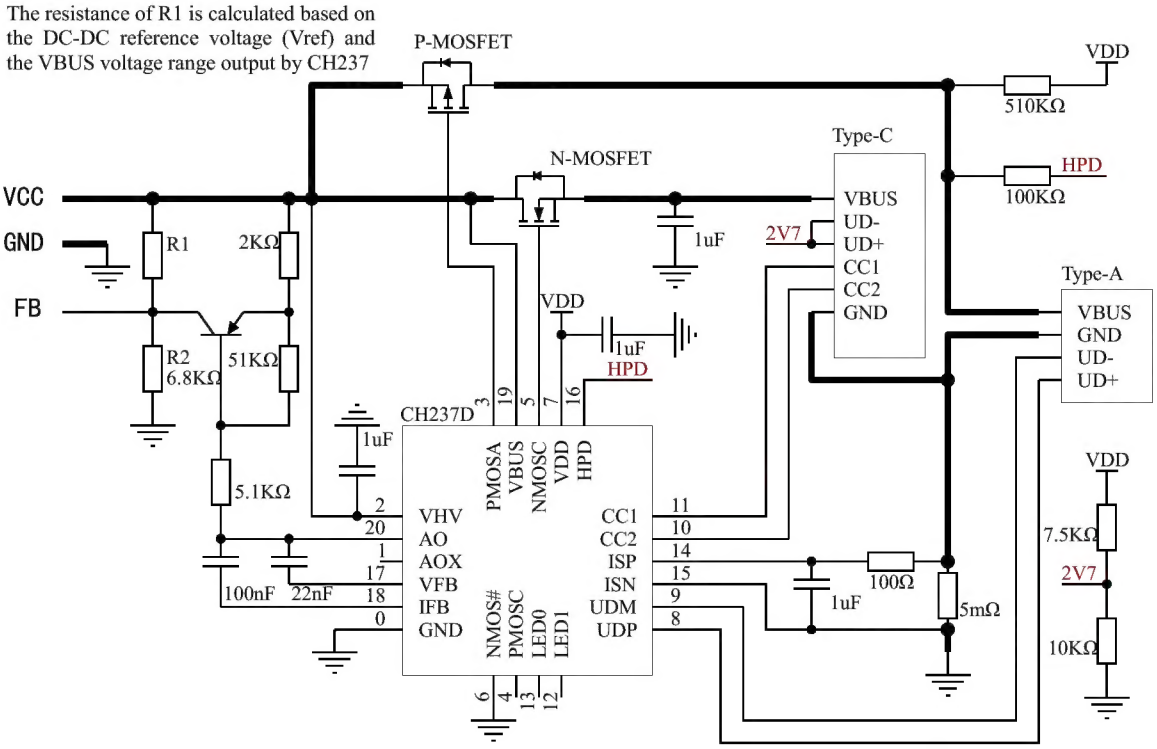

Figure 8.2 Type-A/C Dual-port fast charging reference circuit when CH237D works with DC-DC power

When CH237 works with DC-DC power, the default output voltage of DC-DC should be 1~2V higher than the maximum output voltage of VBUS by configuring the resistance of R1. For example, the VBUS output voltage ranges from 5V to 12V, the default output voltage should be configured as 14V, in this case, R1=14/Vref*6.8K-6.8K. Vref is the reference voltage of DC-DC. When Vref=1.25V, R1=68K.

9. Parameters

9.1. Absolute maximum ratings

Stresses at or above the absolute maximum ratings listed in the table below may cause permanent damage to the device.

Symbol	Parameter description	Min.	Max.	Unit
TA	Ambient temperature during operation	-40	147	°C
TS	Ambient temperature during storage	-55	147	°C
VDD	Operating supply voltage (VDD connects to power, GND to ground)	-0.5	6	V
VHV	HV supply voltage (VHV connects to power, GND to ground)	-0.5	25	V
VIOHX	Voltage on PMOSA, PMOSC and NMOSC pins	-0.5	VHV+6.5	V
VIO	Voltage on UDP, UDM, ISP, ISN, VFB, IFB, LED0, LED1 and HPD pins	-0.5	VDD+0.5	V
VIOCC	Voltage on CC1 and CC2 pins	-0.5	20	V
VIOHV	Voltage on VBUS and AO pins	-0.5	VHV+0.5	V
PD	Maximum power consumption of the entire chip (VHV voltage * current +VBUS discharge power consumption)	-0.5	400	mW
ESD	Human body model (HBM)		2	KV

9.2. Electrical characteristics

Test condition: TA=25°C

Symbol	Parameter description	Min.	Typ.	Max.	Unit
VDD	Voltage on VDD	4.6	4.7	4.8	V
VHV	Voltage on VHV	3.3		22	V
VIOHV	Voltage on AO and VBUS pins	0		22	V
VIOLV	Voltage on CC1, CC2, UDP and UDM pins	0		VDD	V
VOVP	Over-voltage protection reference threshold voltage		25.6		V
VUVP	Under-voltage protection reference threshold voltage		2.4		V
TOTPT	Over-temperature protection trigger temperature		147±15		°C
TOTPR	Over-temperature protection release temperature		100±15		°C

10. Package information

Package	Body size	Lead pitch		Part No.
QFN20	3*3mm	0.40mm	15.7mil	CH237D

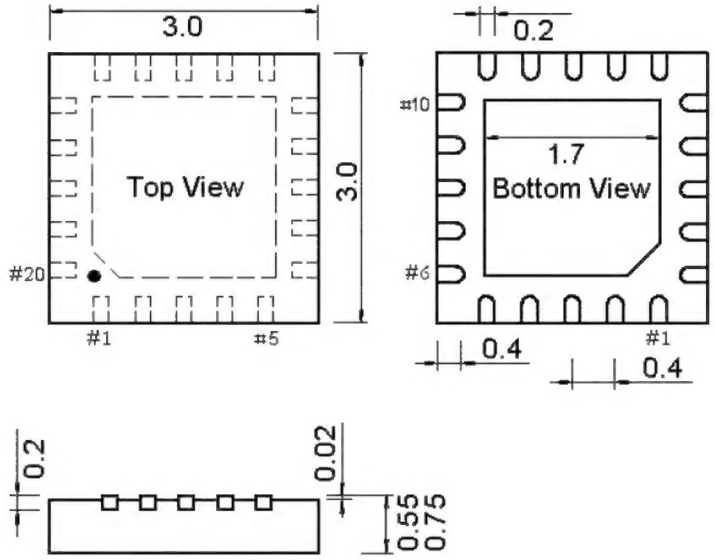

Note: All dimensions are in millimeters.

11. Ordering information

	CH237	D	1	A	-XXX
Product No.					
Package	**D**:QFN20 3*3mm				
Output voltage tap position	See the table below				
Power configuration	**A**:AO pin drive				
Customized model code	**None:** Standard type **XXX**: Customized model code				

Configuration code and output voltage tap position

Configuration code	Output voltage configuration							
	PDO 1	**PDO 2**	**PDO 3**	**PDO 4**	**PDO 5**	**PDO 6**	**PDO 7**	**QC 3.0**
1	5V@3A	9V@2A	12V@1.5A			3.3~5.9V@3A	3.3~11V@2A	3.6~12V
2	5V@3A	9V@3A	12V@2.25A			3.3~5.9V@3A	3.3~11V@3A	3.6~12V
3	5V@3A	9V@3A	12V@2.5A			3.3~12V@2.5A		3.6~12V
4	5V@3A	9V@3A	12V@2.5A	15V@2A	20V@1.5A	3.3~5.9V@3A	3.3~11V@3A	3.6~12V
5	5V@3A	9V@3A	12V@3A	15V@3A	20V@2.25A	3.3~20V@2.25A		3.6~20V
6	5V@3A	9V@3A	12V@3A	15V@3A	20V@3A	3.3~20V@3A		3.6~20V
7	5V@3A	9V@3A	12V@3A		20V@1.8A	3.3~12V@3A		3.6~12V
8	5V@3A	9V@3A	12V@3A			3.3 ~ 5.9V@3A	3.3 ~ 12V@3A	3.6 ~ 12V
9	5V@3A	9V@2.22A	12V@1.67A			3.3 ~ 5.9V@3A	3.3 ~ 11V@2A	3.6 ~ 12V
A	5V@3A	9V@2.77A				3.3~5.9V@3A	3.3~11V@2.25A	3.6 ~ 12V
Others	Customized							